MOTOR & PARTS

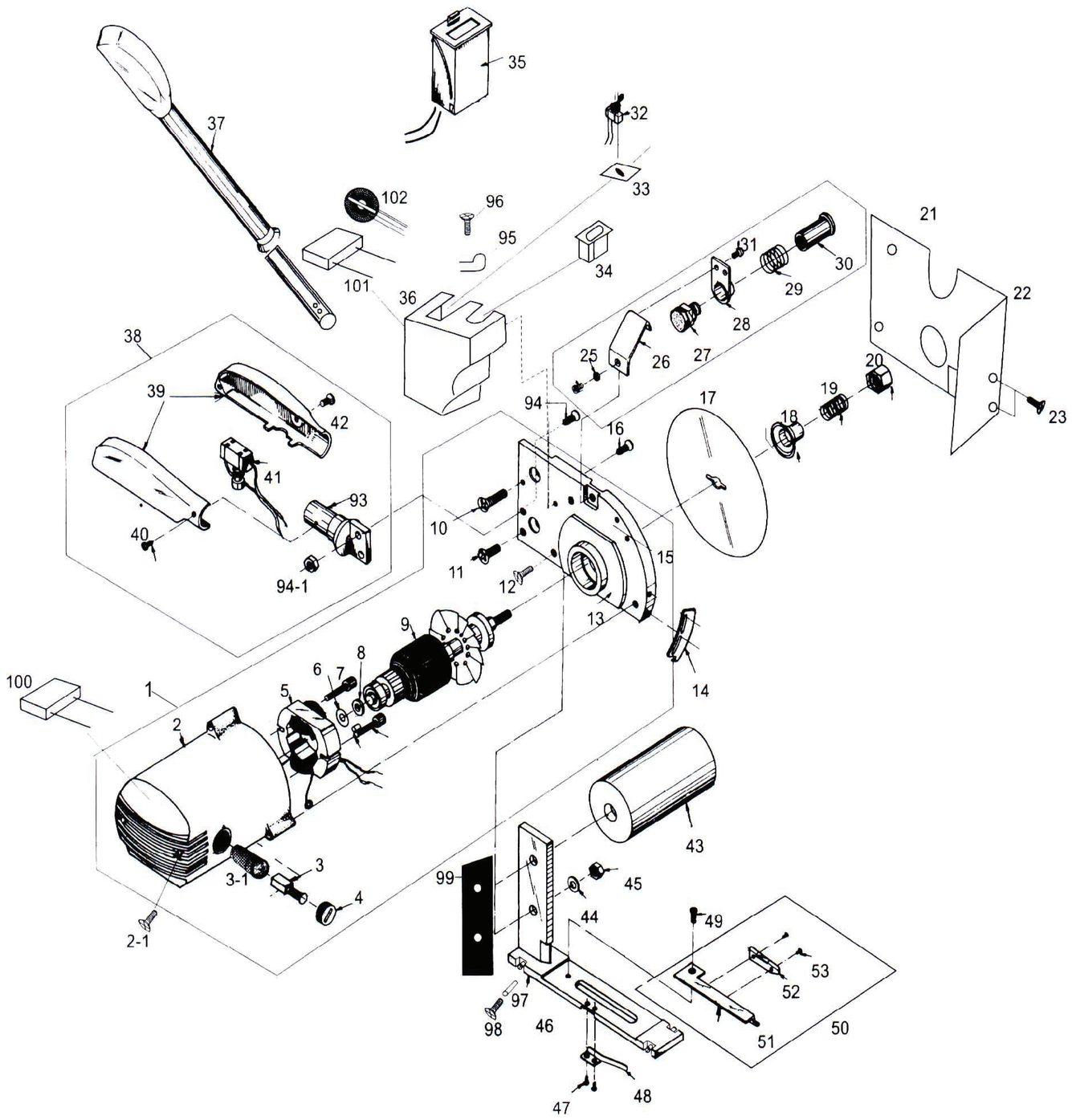

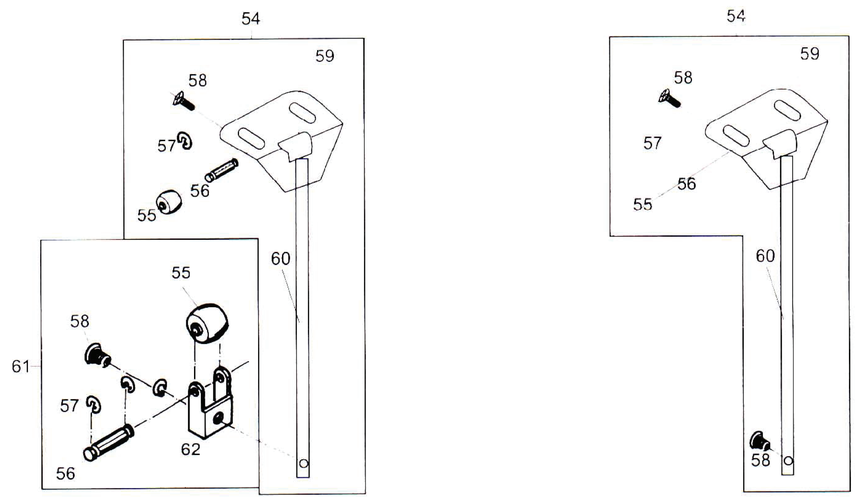

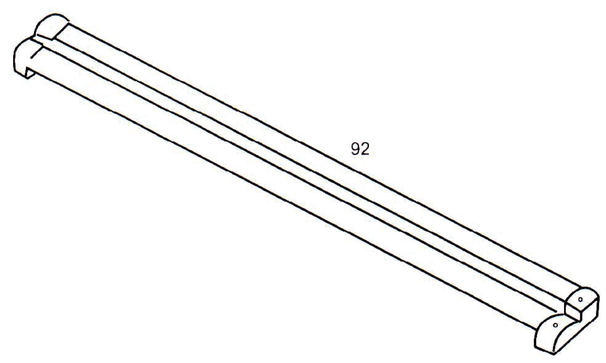

CP-109 & PARTS		
PARTS NO.	PARTS NAME	Q'TY
E-54	BAR LIFTER ASSEMBLY	2
E-61	ROLLER ASSEMBLY	1
E-63	LIFTING SPRING	2
E-64	SPRING HOOK	2
E-65	CLAMP ASSEMBLY	2
E-78	BELT FOR BAR LIFTER	1
E-92	CLOTH PRESS TRACK	1

ACCESSORY		
PARTS NO.	PARTS NAME	Q'TY
E-03	Carbon Brush With Spring	碳刷
E-87	Cleaning Brush	清潔刷
E-88	Screwdriver(+)	十字起子
E-89	Wrench	扳手
E-90	Oiler	油壺
E-91	Cable	電源線

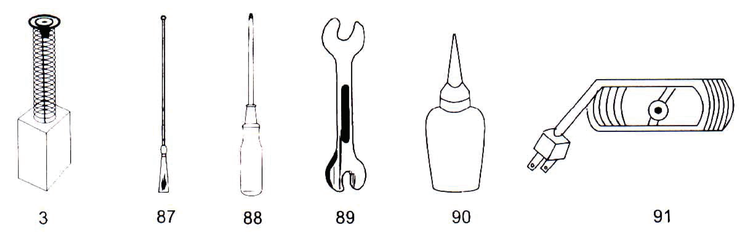

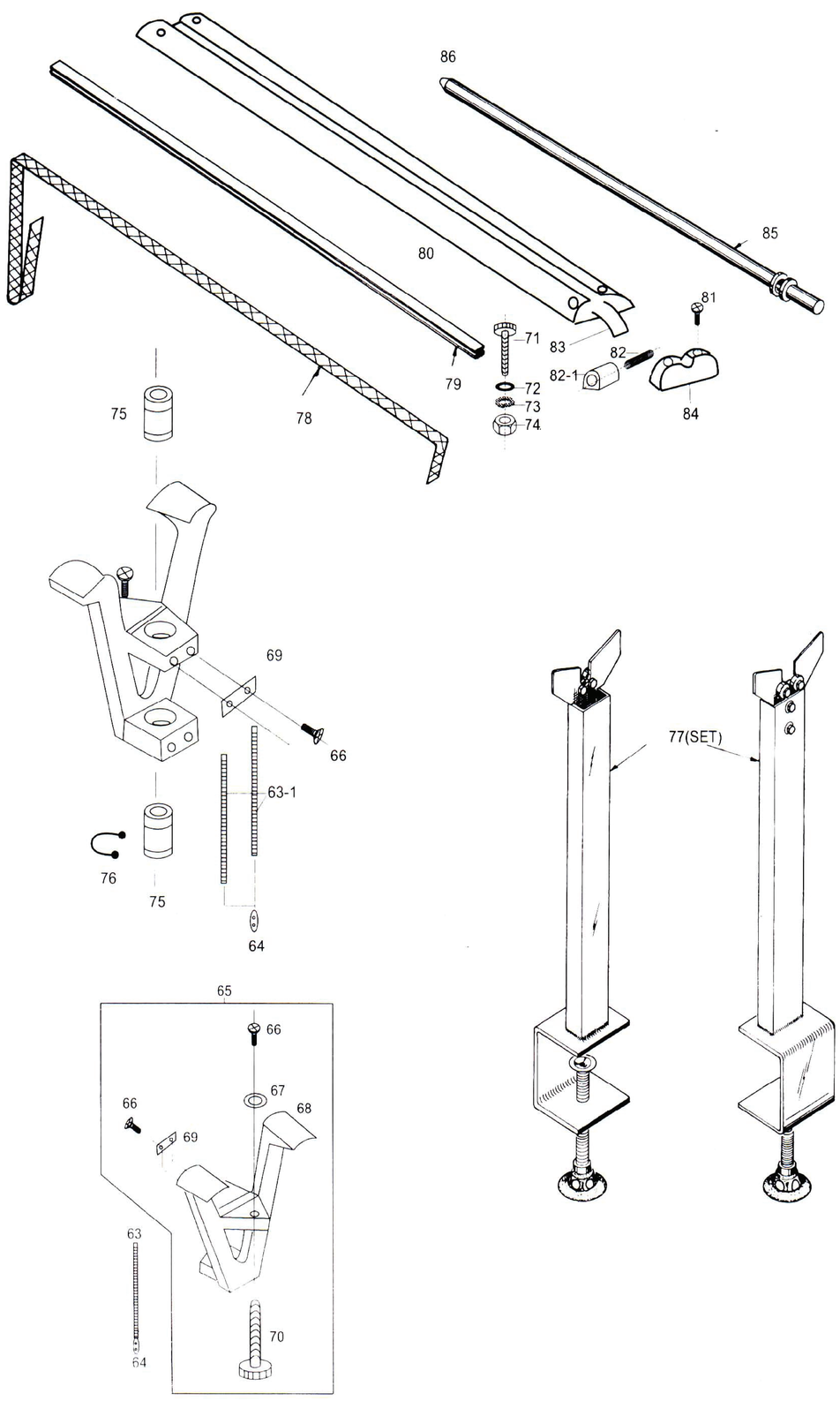

Part No.	PART NEME	Part No.	PART NEME
E-01	Motor	E-50	Counter Blade Assembly
E-02	Motor Cover	E-51	Counter Blade Fixde Base
E-02-1	Screw for Motor Cover	E-52	Counter Blade
E-3-1	Carbon Brush Fixed Buse	E-53	Screw
E-04	Cap For Carbon Brush	E-54	Bar Lifter Assembly
E-05	Stator	E-55	Roller
E-06	O Ring	E-56	Roller Frame Stud
E-07	Screw For Stator	E-57	Snap Ring (E5)
E-08	Washer	E-58	Serew
E-09	Rotor	E-59	Bar Lifter Elbow
E-10	Screw 20L	E-60	Bar Lifter
E-11	Screw 30L	E-61	Roller Assembly
E-12	Screw For Grounding	E-62	Roller Fixde Base
E-13	Motor Plate	E-63	Lifting Spring (Black)
E-14	Finger Guard	E-63-1	Lifting Spring (Whirt)
E-15	Oil Felt	E-64	Spring Hook
E-16	Screw	E-65	Clamp Assembly
E-17	Blade	E-66	Screw
E-18	Cover For Blade	E-67	Washer
E-19	Spring For Blade	E-68	Clamp
E-20	Lock Nut For blade	E-69	Belt Press For Bar Lifter
E-21	Screw	E-70	Lock Screw With Tension
E-22	Blade Cover	E-71	Scerw For Rail
E-23	Scerw	E-72	Washer
E-24	Whetstone Assembly	E-73	Spring Washer
E-25	Screw	E-74	Nut
E-26	Bracker (A)	E-75	Bearing
E-27	Whetstone	E-76	Snap Ring
E-28	Bracket(B)	E-77	Sustaining Frame Unit
E-29	Spring	E-78	Belt For Bar Lifter
E-30	Push Knob For Stone	E-79	Rail Rubber Tape
E-31	Screw	E-80	Rail
E-32	Switch For Stone	E-81	Screw
E-33	Switch Fixed Base	E-82	Spring
E-34	Receptacle	E-82-1	Rubber Plate
E-35	Counter	E-83	Stainless Steel Piece
E-36	Terminal Box	E-84	Lift Handle
E-37	Long Handle	E-85	Sustaing Roller
E-38	Handle Assembly	E-86	Plug
E-39	Handle	E-92	Cloth Press Track
E-40	Screw	E-93	Handle Fixed Base
E-41	Switch	E-94	Screw
E-42	Screw	E-94-1	Nut
E-43	Balance Bar	E-95	Cable Clamp
E-44	Spring Washer	E-96	Screw
E-45	Nut	E-97	Rollers
E-46	Sliding Base Plate	E-98	Screw For Rollers
E-47	Screw	E-99	Rubber Washer
E-48	Adjusting spring	※E-100	Condenser
E-49	Screw	※E-101	Condenser
		※E-102	Inductor

※for CE model only